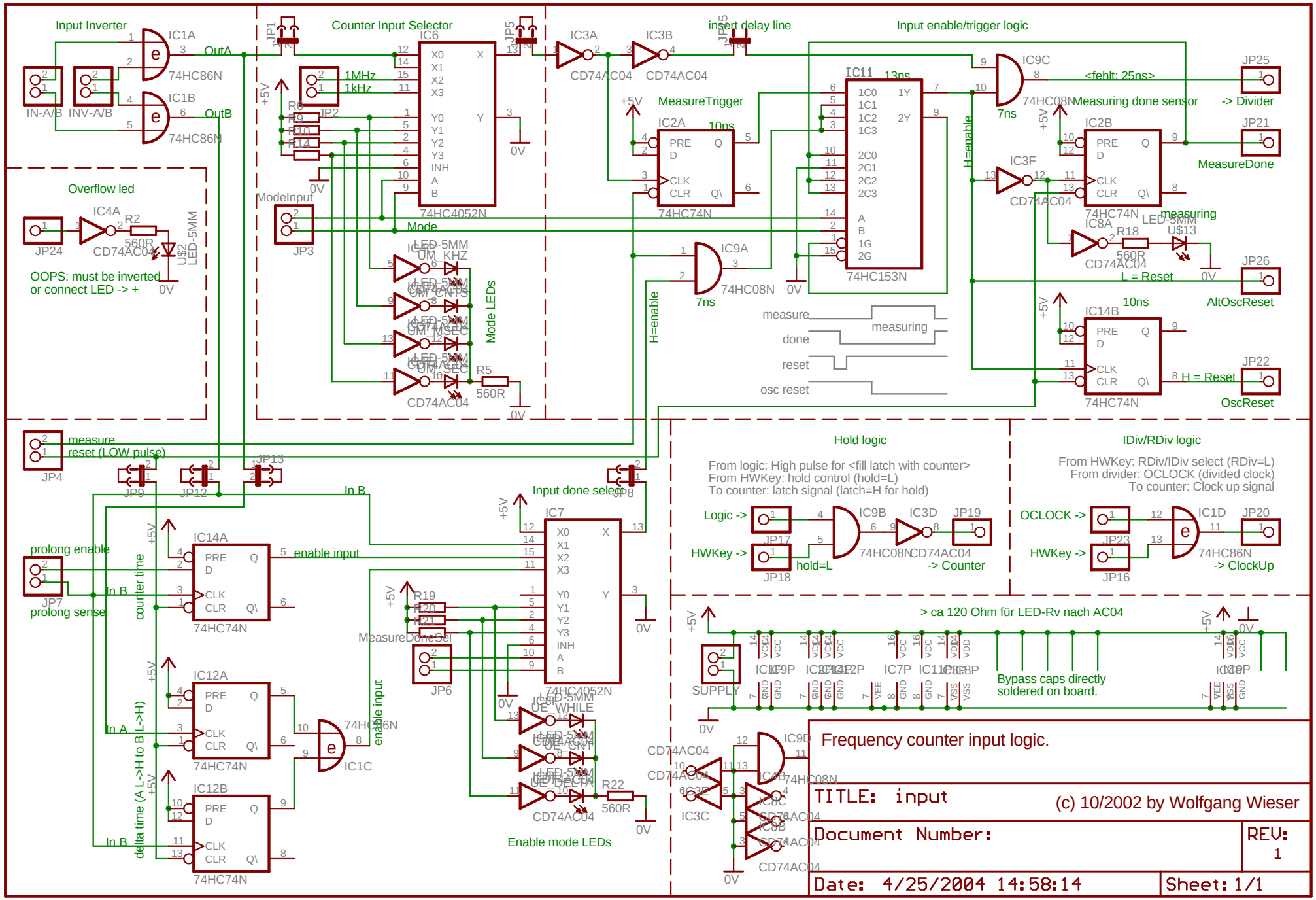
Input Inverter
IC1A
74HC86N
IC1B
74HC86N
IN-A/B
INV-A/B
OutA
OutB
Counter Input Selector
IC6
74HC4052N
1MHz
1kHz
ModeInput
JP3
Mode
Mode LEDs
UM_KHZ
UM_CNTS
UM_MSEC
UM_SEC
CD74AC04
R5
560R
0V
+5V
insert delay line
IC3A
IC3B
CD74AC04
MeasureTrigger
IC2A
10ns
74HC74N
IC9A
74HC08N
7ns
H=enable
Input enable/trigger logic
IC11
13ns
74HC153N
measure
measuring
done
reset
osc reset
IC9C
74HC08N
7ns
<fehlt: 25ns>
Measuring done sensor
-> Divider
JP25
JP21
MeasureDone
IC2B
74HC74N
IC3F
CD74AC04
IC8A
R18
560R
LED-5MM
U$13
measuring
L = Reset
JP26
AltOscReset
IC14B
10ns
74HC74N
H = Reset
JP22
OscReset
Overflow led
IC4A
CD74AC04
R2
560R
JP24
LED-5MM
OOPS: must be inverted
or connect LED -> +
JP4
measure
reset (LOW pulse)
JP9
JP12
JP13
JP8
In B
Input done select
IC7
74HC4052N
prolong enable
JP7
prolong sense
IC14A
74HC74N
enable input
counter time
IC12A
74HC74N
IC12B
74HC74N
delta time (A L->H to B L->H)
In A
IC1C
74HC86N
R19
R20
R21
MeasureDoneSel
JP6
UE_WHILE
UE_GNT
UE_DELTA
CD74AC04
R22
560R
Enable mode LEDs
Hold logic
From logic: High pulse for <fill latch with counter>
From HWKey: hold control (hold=L)
To counter: latch signal (latch=H for hold)
Logic ->
HWKey ->
JP17
JP18
hold=L
IC9B
IC3D
74HC08N
CD74AC04
JP19
-> Counter
IDiv/RDiv logic
From HWKey: RDiv/IDiv select (RDiv=L)
From divider: OCLOCK (divided clock)
To counter: Clock up signal
OCLOCK ->
HWKey ->
JP23
JP16
IC1D
74HC86N
JP20
-> ClockUp
> ca 120 Ohm für LED-Rv nach AC04
SUPPLY
Bypass caps directly
soldered on board.
IC9D
74HC08N
IC3C
IC3E
IC8B
IC8C
CD74AC04
Frequency counter input logic.
TITLE: input
(c) 10/2002 by Wolfgang Wieser
Document Number:
REV: 1
Date: 4/25/2004 14:58:14
Sheet: 1/1