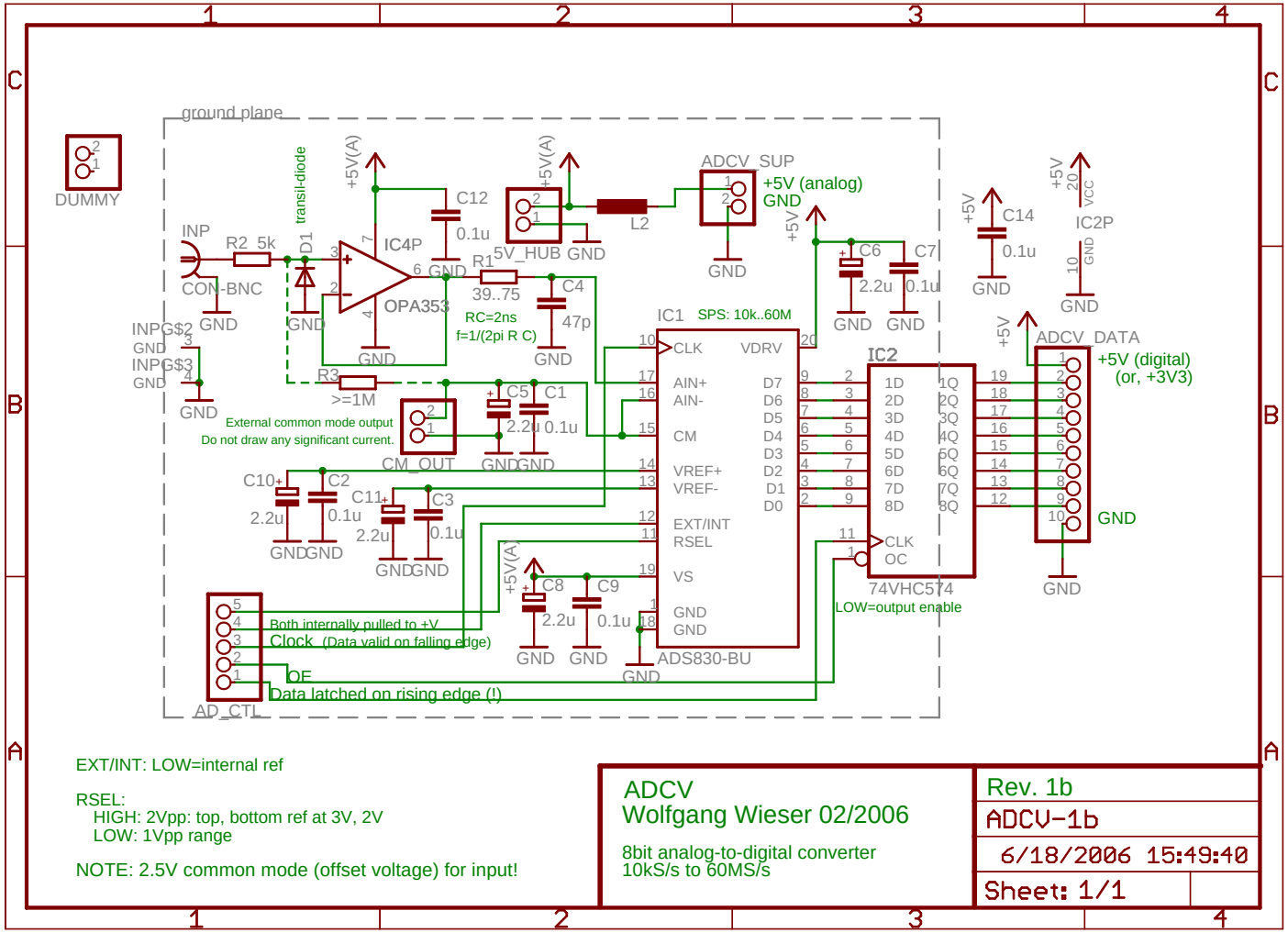


EXT/INT: LOW=internal ref

RSEL:
HIGH: 2Vpp: top, bottom ref at 3V, 2V
LOW: 1Vpp range

NOTE: 2.5V common mode (offset voltage) for input!

ADCV
Wolfgang Wieser 02/2006

8bit analog-to-digital converter
10kS/s to 60MS/s

Rev. 1b
ADCV-1b
6/18/2006 15:49:40
Sheet: 1/1