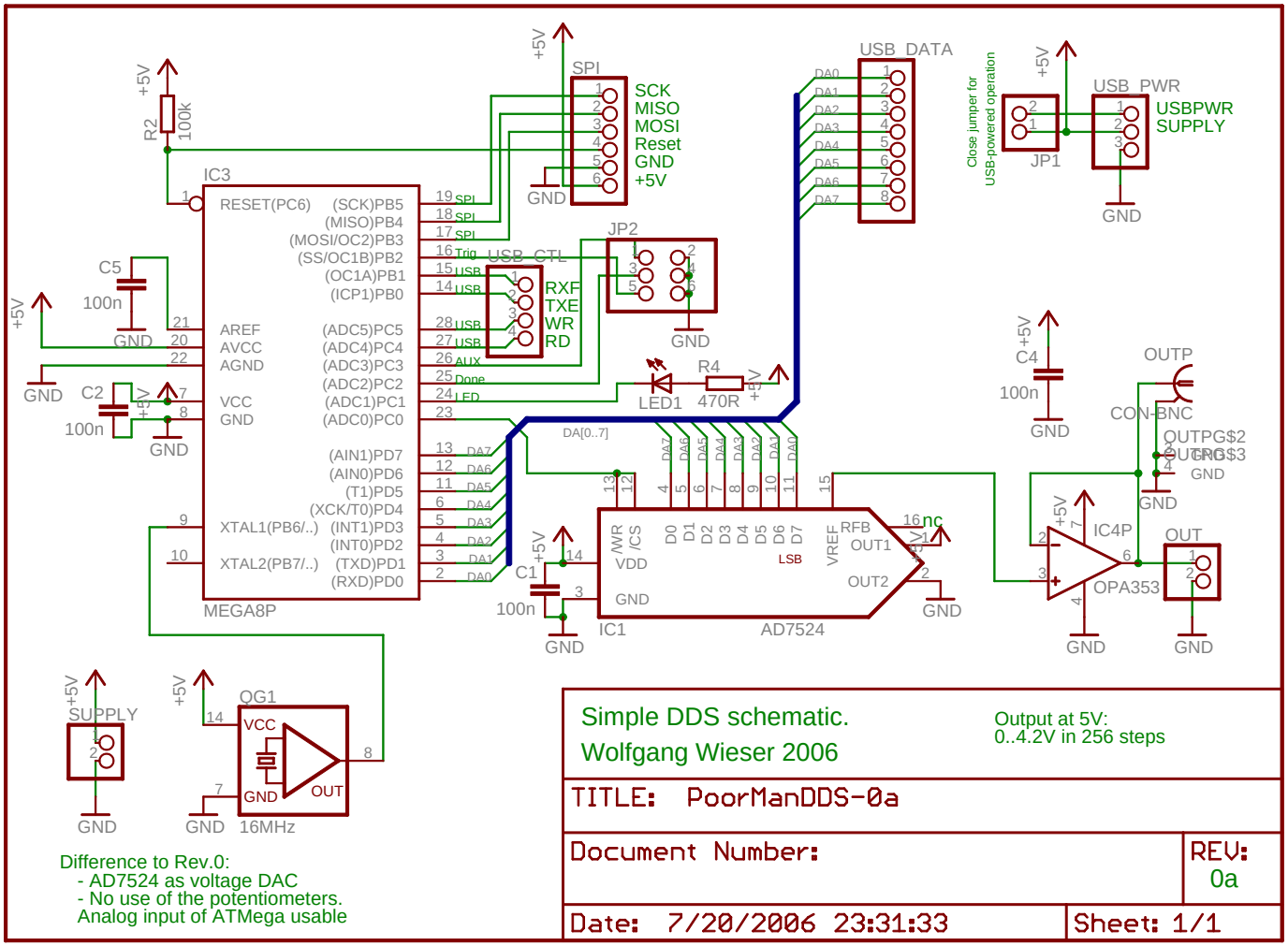

Simple DDS schematic.
Wolfgang Wieser 2006

Output at 5V:
0..4.2V in 256 steps

TITLE: PoorManDDS-0a

Document Number:

REV: 0a

Date: 7/20/2006 23:31:33

Sheet: 1/1

Difference to Rev.0:
- AD7524 as voltage DAC
- No use of the potentiometers.
Analog input of ATMega usable