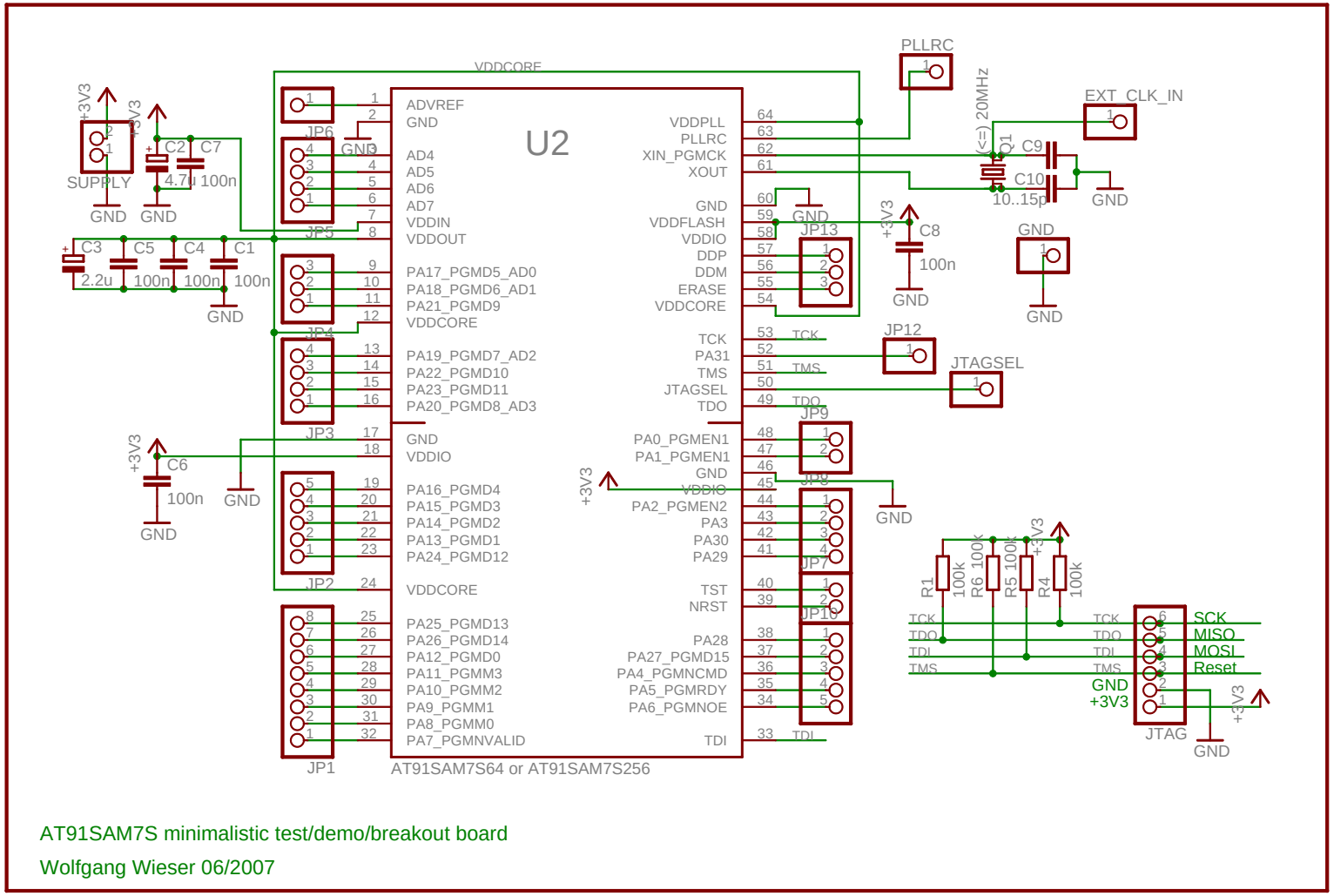

AT91SAM7S minimalistic test/demo/breakout board

Wolfgang Wieser 06/2007