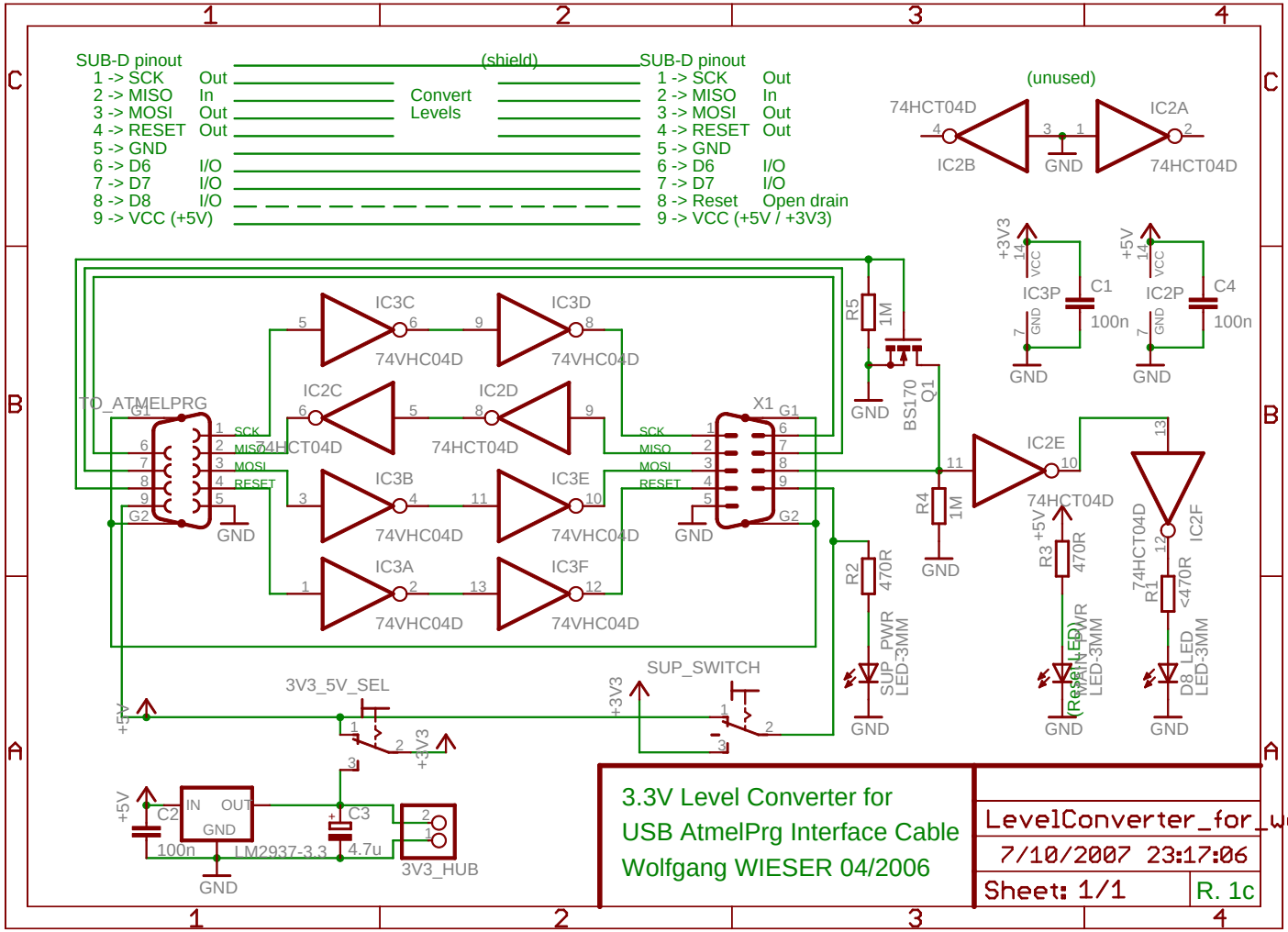
SUB-D pinout
1 -> SCK Out
2 -> MISO In
3 -> MOSI Out
4 -> RESET Out
5 -> GND
6 -> D6 I/O
7 -> D7 I/O
8 -> D8 I/O
9 -> VCC (+5V)
(shield)
Convert Levels
SUB-D pinout
1 -> SCK Out
2 -> MISO In
3 -> MOSI Out
4 -> RESET Out
5 -> GND
6 -> D6 I/O
7 -> D7 I/O
8 -> Reset Open drain
9 -> VCC (+5V / +3V3)
(unused)
74HCT04D
IC2A
IC2B
GND
IC3C
IC3D
IC2C
IC2D
IC3B
IC3E
IC3A
IC3F
74VHC04D
74HCT04D
TO_ATMELPRG
X1
SCK
MISO
MOSI
RESET
G1
G2
R5 1M
BS170 Q1
IC3P
IC2P
C1 100n
C4 100n
+3V3
+5V
VCC
GND
IC2E
R4 1M
R3 470R
R2 470R
R1 <470R
IC2F
SUP LED-3MM
PWR LED-3MM
(Reset LED)
D8 LED LED-3MM
3V3_5V_SEL
SUP_SWITCH
C2 100n
IN OUT GND
LM2937-3.3
C3 4.7u
3V3_HUB
3.3V Level Converter for
USB AtmelPrg Interface Cable
Wolfgang WIESER 04/2006
LevelConverter_for_webpage
7/10/2007 23:17:06
Sheet: 1/1
R. 1c