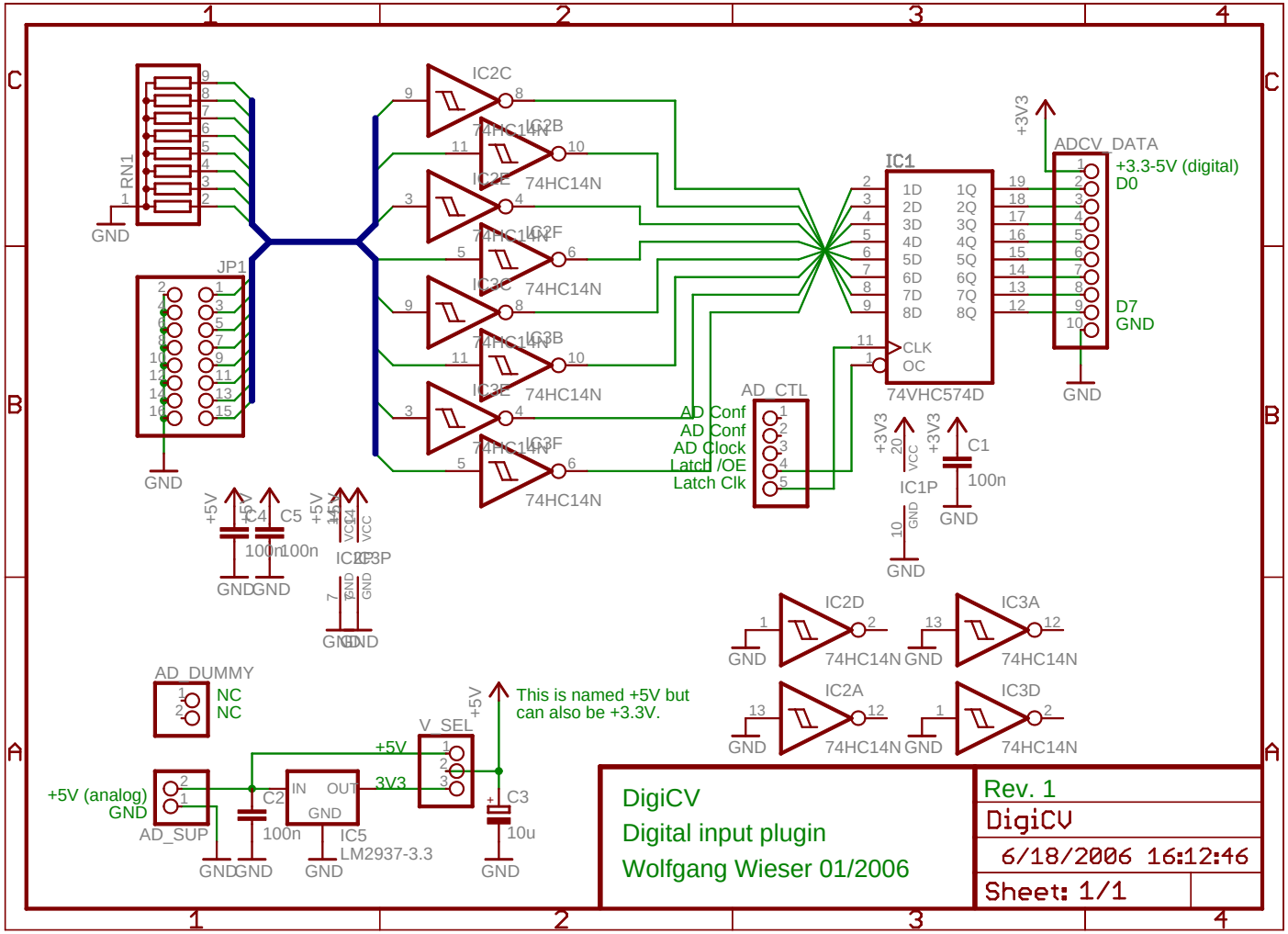
RN1
GND
JP1
GND
IC2C
IC2B
IC2E
IC2F
IC3C
IC3B
IC3E
IC3F
74HC14N
IC1
1D 2D 3D 4D 5D 6D 7D 8D
1Q 2Q 3Q 4Q 5Q 6Q 7Q 8Q
CLK
OC
74VHC574D
+3V3
ADCV_DATA
+3.3-5V (digital)
D0
D7
GND
AD_CTL
AD Conf
AD Conf
AD Clock
Latch /OE
Latch Clk
C1
100n
IC1P
C4
C5
100n
IC3P
IC2D
IC3A
IC2A
IC3D
AD_DUMMY
NC
NC
V_SEL
+5V
This is named +5V but can also be +3.3V.
+5V (analog)
GND
AD_SUP
C2
100n
IN
OUT
GND
IC5
LM2937-3.3
3V3
C3
10u
DigiCV
Digital input plugin
Wolfgang Wieser 01/2006
Rev. 1
DigiCV
6/18/2006 16:12:46
Sheet: 1/1