Latch16Bit board -- parallel port IO card

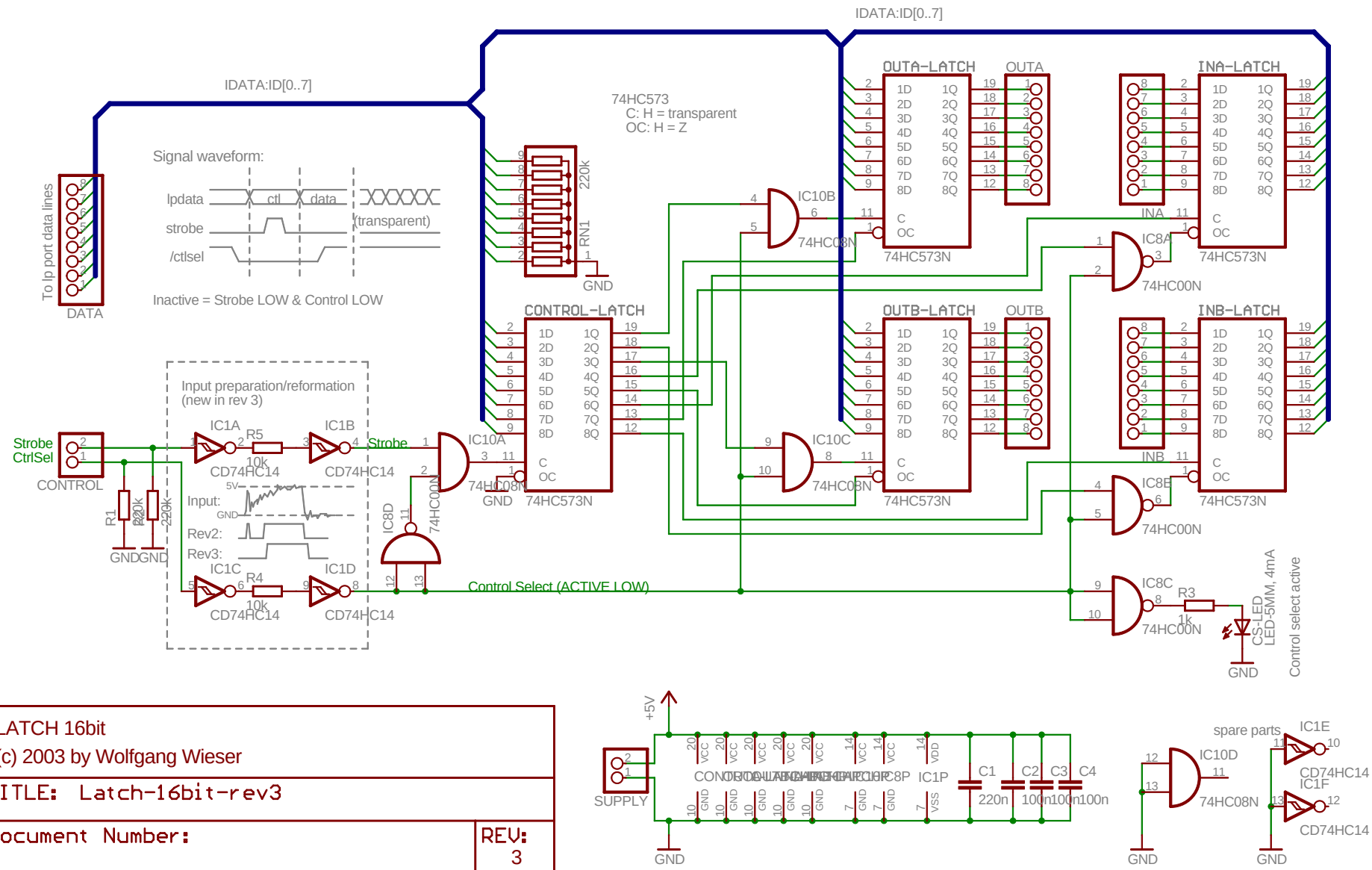

LATCH 16bit

(c) 2003 by Wolfgang Wieser

TITLE: Latch-16bit-rev3

Document Number:

REV: 3

Date: 9/22/2003 01:37:16

Sheet: 1/1